OPERATOR'S AND PARTS MANUAL

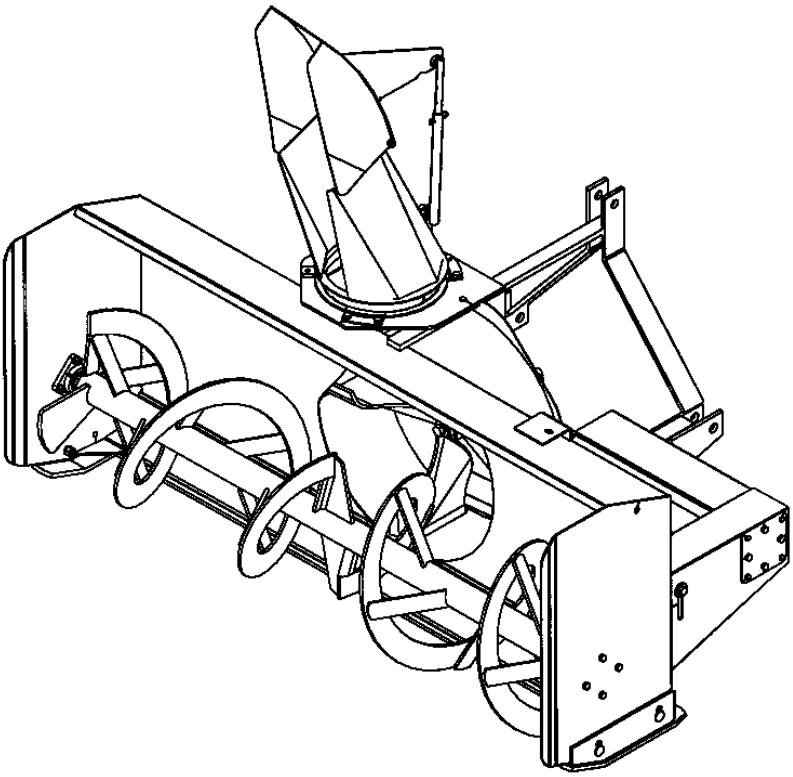

SNOWBLOWER

BLIZZARD B84 & B94 MODELS

SERIAL NO. 2025665 AND UP

OM 0279-A
08/02

BLIZZARD

by RAD Technologies Inc.

TABLE OF CONTENT

INTRODUCTION – TO THE PURCHASER 3

SAFETY PRECAUTIONS 4
- Before Operation 4
- Notice 5
- The Snowblower 5
  - Before Operation 5
  - Snowblower Operation 6
- The Tractor 7
  - General Information 7
  - Operating the Tractor 7
  - During Operation 7
- Maintenance 8
- Transporting 8
- Storage 8

DECALS 9

ASSEMBLY 10
- Snowblower Assembly 10
  - Driveline Installation 10
  - Snowblower Installation 11
  - Detaching Snowblower from Tractor 11
  - Manual Chute Rotation – 8051 (Option) 12
  - Cable Installation 12
  - Hydraulic Rotation with Cylinder – Kit 8046 (Option) 14

OPERATION 15
- General Preparation 15
- Operating Controls 15
  - Work and Travel Speed 15
  - Raising and Lowering the Snowblower 15
  - Drive Shaft Operation 15
  - Manual Rotation 15
  - Deflector Adjustment 15
  - Reduction Chain Tension Adjustment 16
  - Skid Shoe Adjustment 16

- Snow Removal Methods 17

TABLE OF CONTENT

MAINTENANCE 18
Maintenance 18
Storage 18
Driveline 18
Lubrication 18

PARTS 19
Introduction 19
Frame and Related Parts- Blizzard B84 & B94 20
Manual Rotation – Kit 8051 23
Hydraulic Rotation by Cylinder – Kit 8046 24
Gearbox (662195) 25
Driveline (662538) 26

WARRANTY 27

TORQUE SPECIFICATION TABLE 28

INTRODUCTION

TO THE PURCHASER

All BER-VAC and BLIZZARD products are designed to give safe, dependable service if they are operated and maintained according to instructions. **Read and understand this manual before operation.**

This manual has been prepared to assist the owner and operators in the safe operation and suitable maintenance of the implements. The information was applicable to products at the time of manufacture and does not include modifications made afterwards.

Read and understand this operator's manual before attempting to put an implement into service. Familiarize yourself with the operating instructions and all the safety recommendations contained in this manual and those labeled on the implements and on the tractor. Follow the safety recommendations and make sure that those with whom you work follow them.

Illustrations

The illustrations may not necessarily reproduce the full detail and the exact shape of the parts or depict the actual models, but are intended for reference only

Direction Reference

Right Hand and Left Hand are determined by those seen by the conductor looking at the machine while operating.

To assist your dealer in handling your needs, please record hereafter the model number and serial number of your implement and tractor. It is also advisable to supply them to your insurance company. It will be helpful in the event that an implement or tractor is lost or stolen.

MODEL : _____

SERIAL NUMBER : _____

DATE OF PURCHASE : _____

SAFETY PRECAUTIONS

SAFETY FIRST

This symbol, the industry's "Safety Alert Symbol", is used throughout this manual and on labels on the machine itself to warn of the possibility of personal injury. Read these instructions carefully. It is essential that you read the instructions and safety regulations before you attempt to assemble or use this unit.

DANGER : Indicates an immediately hazardous situation which, if not avoided, will result in death or serious injury.

WARNING : Indicates a potentially hazardous situation which, if not avoided, could result in death or serious injury.

CAUTION : Indicates a potentially hazardous situation which, if not avoided, may result in minor or moderate injury.

IMPORTANT : Indicates that equipment or property damage could result if instructions are not followed.

NOTE : Gives helpful information.

All products are designed to give safe, dependable service if they are operated and maintained according to instructions. **Read and understand this manual before operation**. It is the owner's responsibility to be certain anyone operating this product reads this manual., and all other applicable manuals, to become familiar with this equipment and all safety precautions. Failure to do so could result in serious personal injury or equipment damage. If you have any questions, consult your dealer.

BEFORE OPERATION

Children

Tragic accidents can occur if the operator is not alert to the presence of children. Children are generally attracted to machines and the work being done. Never assume children will remain where you last saw them.

1. Keep children out of the operating area and under the watchful eye of another responsible adult.
2. Be alert and turn machine off if children enter the work area.
3. Before and when backing, look behind and look for small children.
4. Never carry children while operating the machine. They may fall off and be seriously injured or interfere with safe operation of the machine.
5. Never allow children to play on the machine or attachment even when turned off.
6. Never allow children to operate the machine even under adult supervision.
7. Use extra care when approaching blind corners, shrubs, trees, or other obstructions that might hide children from sight.

NOTICE

A safe operator is the best insurance against accidents. All operators, no matter how experienced they may be, should read this Operator's Manual and all other related manuals before attempting to operate an implement. Please read the following section and pay particular attention to all safety recommendations contained in this manual and those labeled on the implements and on the tractor.

THE SNOWBLOWER

Before Operation

1. Read and understand this operator's manual and tractor operator's manual. Know how to operate all controls and how to stop the unit and disengage the controls quickly.

2. Never wear loose, torn, or bulky clothing around the tractor and implement. It may catch on moving parts or controls, leading to the risk of accident.

3. Before the snow season, thoroughly inspect the area where the equipment is to be used and remove all doormats, sleds, boards and other foreign objects.

4. Disengage clutch and shift into neutral before starting the engine.

5. Do not operate equipment in wintertime without wearing adequate winter garments.

6. Never attempt to make any adjustments while engine is running. Read this manual carefully to acquaint yourself with the equipment as well as the tractor operator's manual. Working with unfamiliar equipment can lead to accidents. Be thoroughly familiar with the controls and proper use of the equipment. Know how to stop the unit and disengage the controls quickly.

7. Keep all shields in place and properly tighten all mounting hardware.

8. Periodically, inspect all moving parts for wear and replace with authorized service parts if an excessive amount of wear is present.

9. Replace all missing, illegible, or damaged safety and warning decals. See list of decals in the operator's manual.

10. Do not modify or alter this equipment or any of its components, or any equipment function without first consulting your dealer.

11. Keep safety decals clean of dirt and grime.

Snowblower Operation

1. Before leaving the tractor unattended, take all possible precautions. Disengage the PTO, stop the engine and remove the ignition key. Lower the implement to the ground.
2. Before starting the snowblower, remove any ice that has accumulated in the auger/impeller.
3. Watch carefully for foreign objects that could enter the blower while operating.
4. Be sure the clutch switch/lever is in OFF position before starting engine.
5. Do not put hands or feet near rotation parts. Keep clear of discharge opening at all times.
6. Exercise extreme caution when operating on or crossing a gravel drive, walks, or roads. Stay alert for hidden hazards or traffic. Do not carry passengers.
7. Adjust collector housing height to clear gravel or crushed rock surface.
8. Stop the engine, remove the key, and allow the rotating parts to stop before unclogging the collector/impeller housing or chute, and making any repairs, adjustments or inspections. Use only a 36" long piece of wood to unclog blower.
9. If the snowblower starts to vibrate abnormally, stop the engine immediately and check for cause. Excessive vibration is generally a sign of trouble.
10. Do not run the engine indoors except when starting engine and transporting attachment in or out of building. Carbon monoxide gas is colorless, odorless and deadly.
11. Exercise extreme caution when changing direction on slopes. Do not attempt to operate on steep slopes.
12. Never operate snowblower without guards, and other safety protective devices in place.
13. Never operate snowblower near glass enclosures, automobiles, window wells, embankments, etc., without proper adjustment of snow discharge angle.
14. Never operate machine at high transport speeds on a slippery surface.
15. Use extra caution when backing up.
16. Do not direct discharge at bystanders or animals. Ejected objects may cause injury.
17. Disengage power to auger/impeller when transporting or when not in use.
18. Never operate the snowblower without good visibility and lighting.
19. Prolonged exposure to loud noise can cause impairment or loss of hearing. Wear a suitable hearing protective device such as earmuffs or earplugs to protect against objectionable or uncomfortable noises

THE TRACTOR

General Information

1. Read the operator's manual carefully before using tractor. Lack of operating knowledge can lead to accidents.
2. Do not permit anyone but the operator to ride on the tractor. There is no safe place for extra riders.

Operating the Tractor

1. Never run the tractor engine in a closed building without adequate ventilation, as the exhaust fumes are very dangerous.
2. Never allow an open flame near the fuel tank or battery.
3. Make sure the shield is installed when using a PTO-driven equipment and always replace the shield if damaged.
4. Always bring the tractor to a complete stop, shut off the engine, lower the implement to the ground and remove the ignition key before leaving the tractor.
5. Never park the tractor on a steep slope.
6. Do not attempt to operate on steep slopes.
7. Use of tire chains for better traction and stability is recommended.
8. Always drive the tractor at speeds compatible with safety, especially when operating over rough ground, crossing ditches, or when turning.
9. Handle fuel with care, as it is highly flammable.
10. Use approved fuel container.
11. Never add fuel to a running engine or a hot engine.
12. Fill fuel tank outdoors with extreme care. Never fill fuel tank indoors. Replace fuel cap securely and wipe up spilled fuel.
13. Never allow anyone to operate the snowblower until they are thoroughly familiar with basic tractor and snowblower operation.
14. Make sure the tractor is counterweighted as recommended by your dealer. Weights provide the necessary balance to prevent tip-over or loss of traction or steering.
15. Always make sure all snowblower components are properly installed and securely fastened BEFORE operation.

During Operation

1. Do not allow anyone to ride on the tractor/snowblower at any time. There is no safe place for passengers on this equipment. The operator MUST sit in the tractor seat.
2. Eye and hearing protection is recommended when operating the snowblower.
3. Operate only during daylight hours, or when the area is well lit with bright artificial light.
4. Disengage the PTO (turn to “OFF”), place the transmission in neutral, set the parking brake, shut off the engine and remove the key, and make sure rotating components have stopped BEFORE leaving the operator’s seat.
5. Inspect the snowblower after striking any foreign object to assure that all snowblower parts are safe and secure and not damaged.

MAINTENANCE

Park the tractor/snowblower on level ground, set the parking brake, disengage the PTO, shut off the engine, remove the key, and lower the implement to the ground BEFORE making any snowblower adjustments.

1. To avoid injury, do not adjust, unclog or service the snowblower with the tractor engine running. Making sure rotating components have completely stopped before leaving the operator's seat
2. Keep the tractor/snowblower clean. Snow and ice build-up can lead to malfunction or personal injury from thawing and refreezing in garage.
3. Always wear eye protection when cleaning or servicing the snowblower.
4. Do not work under any part of the tractor or snowblower, unless it is securely supported by safety stands.
5. Make sure all shields and guards are securely in place following all service, cleaning, or repair work.
6. Do not modify or alter this equipment or any of its components or operating functions. If you have questions concerning modifications, consult with your dealer.

TRANSPORTING

1. If the tractor/snowblower is to be driven on public roads, it must be equipped with an SMV (Slow Moving Vehicle) sign. Check local traffic codes that may apply to unit usage on public roads and highways in your area.
2. Be alert for all other traffic when driving the tractor/snowblower on public roads or highways.

STORAGE

Before storing the snowblower, certain pre-cautions should be taken to protect it from deterioration.

1. Clean the snowblower thoroughly.
2. Make all the necessary repairs.
3. Replace all Safety Signs that are damaged, lost, or otherwise become illegible. If a part to be replaced has a sign on it, obtain a new safety sign from your dealer and install it in the same place as on the removed part.
4. Repaint all parts from which paint has worn or peeled.
5. Lubricate the snowblower as instructed under **"Lubrication"** section.
6. When the snowblower is dry, oil all moving parts. Apply oil liberally to all surfaces to protect against rust.
7. Store in a dry place.

DECALS

Replace immediately if damaged.

Included with Option 8046

WARNING

FAILURE TO FOLLOW SAFE OPERATING PROCEDURES MAY RESULT IN INJURY.

- FOR SAFE OPERATION FOLLOW ALL OPERATING INSTRUCTIONS AND SAFETY PRECAUTIONS IN OPERATOR'S MANUAL.
- EYE PROTECTION MUST BE WORN AT ALL TIMES.
- KEEP HANDS, FEET AND CLOTHING AWAY FROM POWER DRIVEN PARTS.
- STOP ENGINE BEFORE LEAVING OPERATOR POSITION.
- WAIT FOR ALL MOVEMENTS TO STOP BEFORE STARTING TO ADJUST, LUBRICATE, CLEAN OR UNCLOG THE MACHINE.
- KEEP THE AREA OF OPERATION CLEAR OF ALL PERSONS AND ANIMALS.
- KEEP ALL GUARDS AND SHIELDS IN PLACE.
- NEVER DIRECT DISCHARGE TOWARD BYSTANDERS, BUILDINGS, CARS ETC.
- ALWAYS USE A DUST MASK WHEN WORKING IN DUSTY CONDITIONS.
- KEEP PLASTIC MATERIALS AWAY FROM INTENSE HEAT AND OPEN FLAME.
- NEVER ALLOW PASSENGERS ON THE ATTACHMENT.

229

660988

DANGER

CONTACT DURING USE WILL RESULT IN SERIOUS INJURIES.

TOUT CONTACT PENDANT L'UTILISATION CAUSERA DES BLESSURES GRAVES.

336

664548

DANGER

TO AVOID SERIOUS INJURY: KEEP HANDS OUT OF THIS DISCHARGE CHUTE WHILE ENGINE IS RUNNING

POUR ÉVITER DES BLESSURES GRAVES: GARDER LES MAINS ÉLOIGNÉES DE CETTE GOULOTTE LORSQUE LE MOTEUR EST EN MARCHE.

86

656779

MISE EN GARDE

NÉGLIGER DE SUIVRE LES PROCÉDURES SÉCURITAIRES D'UTILISATION PEUT ENTRAÎNER DES BLESSURES.

- POUR UNE UTILISATION SÉCURITAIRE, SUIVRE TOUTES LES INSTRUCTIONS D'UTILISATION ET PRÉCAUTIONS SÉCURITAIRES DANS LE MANUEL DE L'OPÉRATEUR.
- PORTER DES LUNETTES DE SÉCURITÉ EN TOUT TEMPS.
- GARDER MAINS, PIEDS ET VÊTEMENTS ÉLOIGNÉS DES PIÈCES MOTRICES.
- ARRÊTER LE MOTEUR AVANT DE QUITTER LA POSITION DE L'OPÉRATEUR.
- ATTENDRE QUE TOUS LES MOUVEMENTS SOIENT ARRÊTÉS AVANT D'AJUSTER, LUBRIFIER, NETTOYER OU DÉBLOQUER LA MACHINE.
- GARDER L'ENDROIT D'UTILISATION DÉGAGÉ DE TOUTES PERSONNES ET ANIMAUX.
- GARDER TOUS LES ÉCRANS PROTECTEURS EN PLACE.
- JAMAIS DIRIGER L'ÉVACUATION VERS DES PIÉTONS, BÂTIMENTS, AUTOMOBILES, ETC.
- TOUJOURS UTILISER UN MASQUE À POUSSIÈRE DANS UN ENVIRONNEMENT POUSSIÉREUX.
- GARDER TOUTES LES MATIÈRES PLASTIQUES ÉLOIGNÉES DE LA CHALEUR INTENSE ET DES FLAMMES.
- NE JAMAIS PERMETTRE DE PASSAGERS SUR CETTE MACHINE.

230

660989

DANGER

AVOID INJURY FROM ROTATING AUGER KEEP HANDS, FEET AND CLOTHING AWAY

POUR ÉVITER DES BLESSURES GRAVES: GARDER LES MAINS, LES PIEDS ET LES VÊTEMENTS ÉLOIGNÉS DES VIS SANS FIN

87

656780

B94

334

664459

B84

335

664467

BLIZZARD

By/Par RAD TECHNOLOGIES INC.

664458

Located on Driveline

DANGER

ROTATING DRIVELINE

CONTACT CAN CAUSE DEATH KEEP

PEOPLE AND CLOTHING WELL CLEAR

DO NOT OPERATE WITHOUT

- ALL DRIVELINE, TRACTOR AND EQUIPMENT SHIELDS IN PLACE
- DRIVELINES SECURELY ATTACHED AT BOTH ENDS
- DRIVELINE SHIELDS THAT TURN FREELY ON DRIVELINE

TRANSMISSION ROTATIVE À CARDAN

TOUT CONTACT PEUT CAUSER LA MORT

TENIR LES VÊTEMENTS ET PERSONNES À L'ÉCART

NE PAS OPÉRER SANS

- QUE TOUS LES PROTECTEURS DU TRACTEUR, DE L'ÉQUIPEMENT ET DE L'ARBRE À CARDAN SOIENT EN PLACE.
- L'ARBRE À CARDAN FIXÉ SOLIDEMENT À CHAQUE BOUT
- QUE LES PROTECTEURS TOURNENT LIBREMENT SUR L'ARBRE À CARDAN

88

656781

IMPORTANT

Before using:
- Oil level must be checked
- Fill with SAE 80W90, "AGMA 5 EP" extreme pressure oil or equivalent
- Read instructions manual

IMPORTANT

Avant usage:
- Vérifier le niveau d'huile
- Remplir avec de l'huile SAE 80W90, "AGMA 5EP" pression extreme ou equivalent
- Lire manuel d'instructions

21

655834

SNOWBLOWER ASSEMBLY

The snowblower is assembled at the factory, however, snowblower kits must be assembled. Use the present manual and lay out all parts for assembly. Separate bolts and nuts into various sizes. After assembly, torque all the bolts according to the Torque Specification Table enclosed at the end of the manual.

Driveline Installation (Figure 1)

1. Remove paint from snowblower gear box drive shaft and grease driveline sliding surfaces and yoke.

2. Remove the two bolts of the yoke and slide driveline yoke over drive shaft using sliding action of the driveline. Make sure the driveline is well secured to the drive shaft by replacing the two bolts and tightening them according to the torque specification table (end of manual).

Figure 1

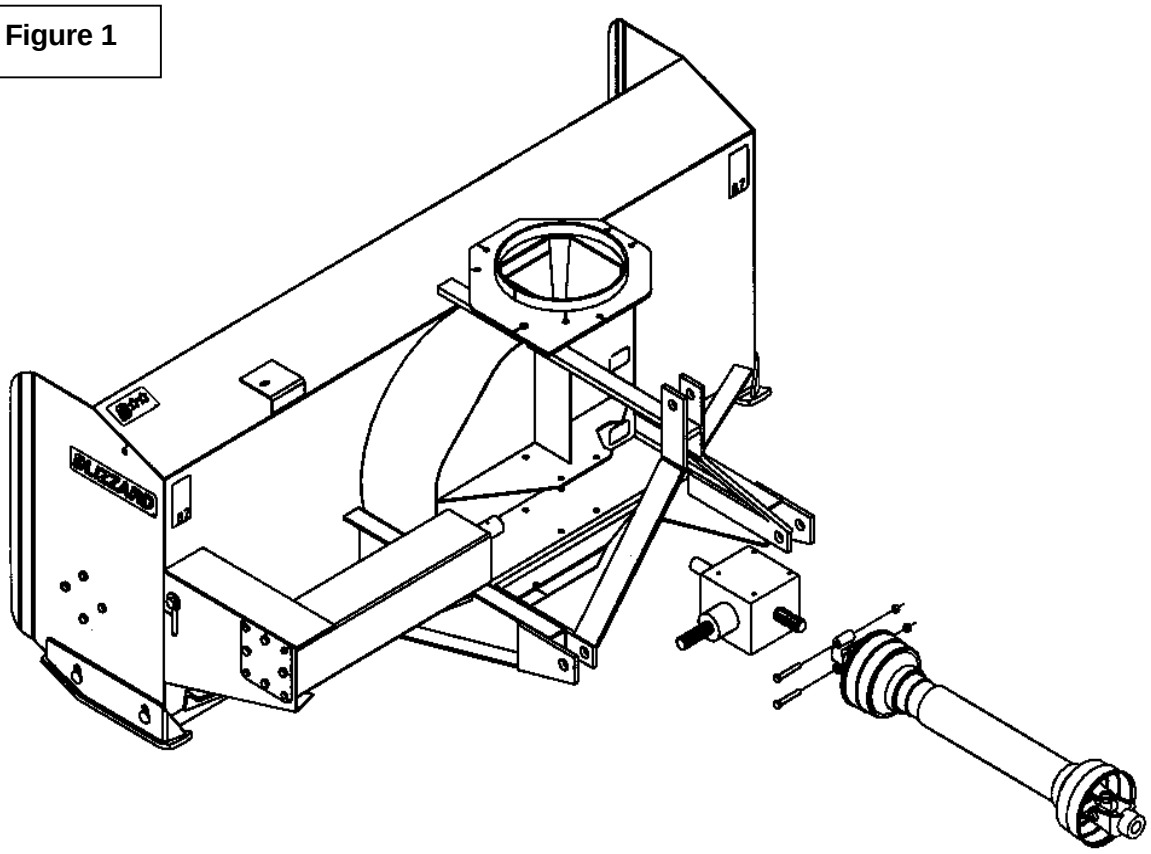

ASSEMBLY

Snowblower Installation (Figure 2)

1. Install the tractor lower hitch arms (items 1) opposite to the holes of the lower snowblower hitches. Insert the roll pins (items 6) and secure with the hair pins and the linch pins (items 7-2).

2. Install the tractor upper hitch (item 3) on the upper hole of snowblower attaching plates (item 5) using tractors pins and linchpins (items 4).

3. Adjust snowblower so that it runs level using the tractor upper hitch.

4. Set the tractor anti-sway turnbuckles so the snowblower does not sway. Be sure the turnbuckles clear the tractor tires.

CAUTION : Before connecting snowblower driveline to tractor drive shaft, make sure driveline is not too long in raised, lowered or middle position. If the driveline is too long it must be shortened, to avoid damaged to tractor.

5. Connect driveline to tractor P.T.O., making sure that the driveline yoke pin is properly engaged.

Note: Depending on tractor used, it may be necessary to install front tractor weights to maintain front end stability.

Detaching Snowblower from Tractor: (Figure 2)

1. Set snowblower completely on the ground to release all pressure from the three point. Set parking brake and turn engine off.

2. Detach upper hitch (item 3) by removing linch pin and pin (items 4).

3. Disconnect driveline from tractor P.T.O. shaft and set driveline on support chain.

4. Carefully detach lower hitch arms (items 1) by removing linch pins (items 2) and by removing the roll pins (items 6).

IMPORTANT: To avoid damage to the snowblower, retorque all bolts after the first 10 hours of operation.

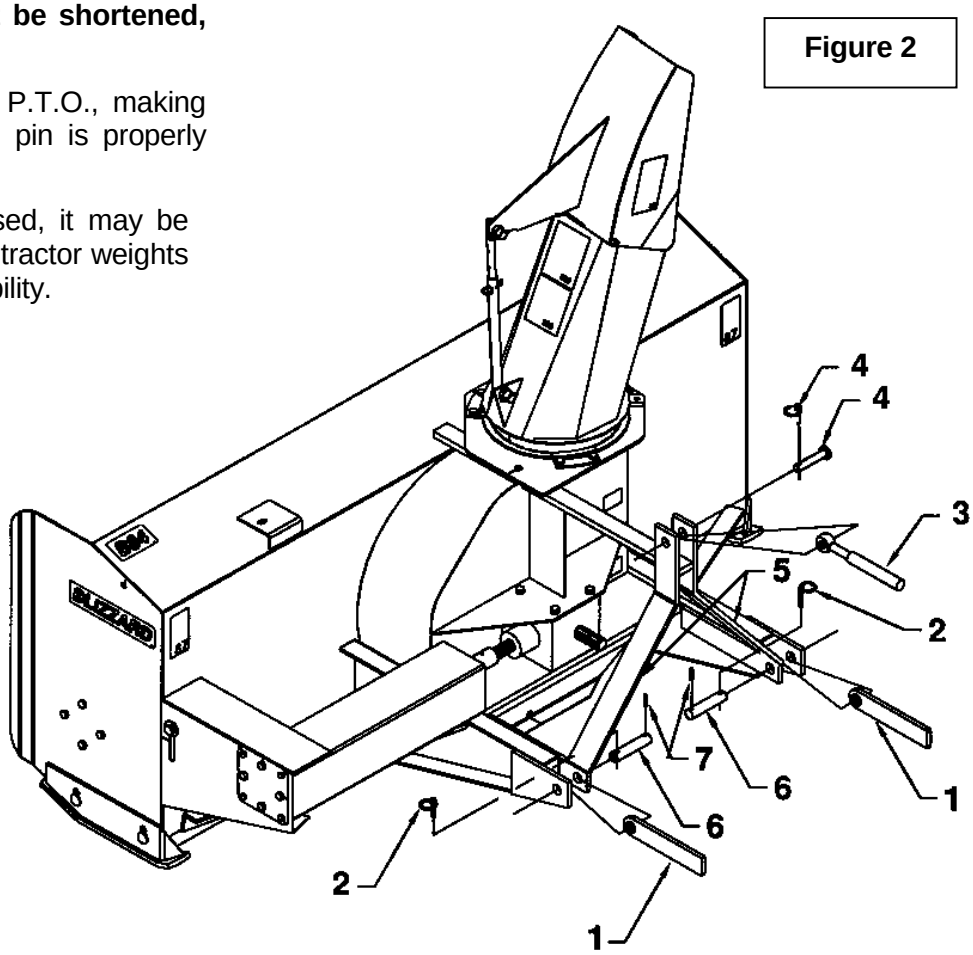

Figure 2

Manual Chute Rotation – 8051 (Option) *(Figure A, next page)*

1. Remove the rotation tube (item 16) by removing the bolt and nut (item 17).
2. Secure the chute with the three retaining plates (and the spacers for SA74 & SA80), using six 1/2" x 1 1/4" bolts (item 9) and serrated flange nuts (item 12).
3. Align flatbar (item 2) with the two holes on top of the snowblower (fig B, items 1-2) as shown on figure 1. Attach with a 3/4"NC x 2 1/2" bolt (item 5) lockwasher (item 13) and nut (item 10) in hole next to the chute (fig B. item 1), and a 1/2"NC x 1 1/4" bolt (item 8), 9/16" flatwasher (item 15) and a 1/2"NC serrated flange nut (item 12) in the side hole (fig.B, item 2).
4. Install manual rotation bracket (item 1) on flatbar (item 2) as shown on figure. Secure on left side with a 5/8" x 2 1/2" bolt (item 6), two 11/16" flatwashers (item 14) and nylon insert locknut (item 11), and on the right side with a 1/2"NC x 1 3/4" bolt (item 7) and a serrated flange nut (item 12).
5. Reinstall the rotation tube (item 16).

CAUTION: To avoid personal injury, check the full lifting range of the snowblower, to ensure that the chute rotation handle is clear of the operator's area when the snowblower is in raised position.

Cable Installation *(Figure A, next page)*

1. Place the left side of the deflector parallel to the front of the snowblower, as shown at the bottom of the page.
2. Turn deflector opening to the right, clockwise, approximately 40 degrees.
3. Tape ends of cable (item 3) with electrical tape to keep ends from fraying.
4. Pass the cable through the rotation tube (item 17) keeping an 8" spare length and locking it temporarily with the cable clamp (item 4).
5. Turn the cable one full turn around the chute base in a clockwise direction.
6. Pass the cable through the two small holes of the base of the chute (item 18), with an in and out motion.
7. Continue to route the cable by passing it under the pulley (item 19).
8. Turn the chute in the opposite direction (same angle of 40 degrees) by turning the rotation handle (item 16) counter-clockwise keeping the cable tight.
9. Attach the two ends of cable together using the cable clamp (item 4). Make sure the cable is properly tight

NOTE: Grease the base of the chute regularly to avoid premature wear.

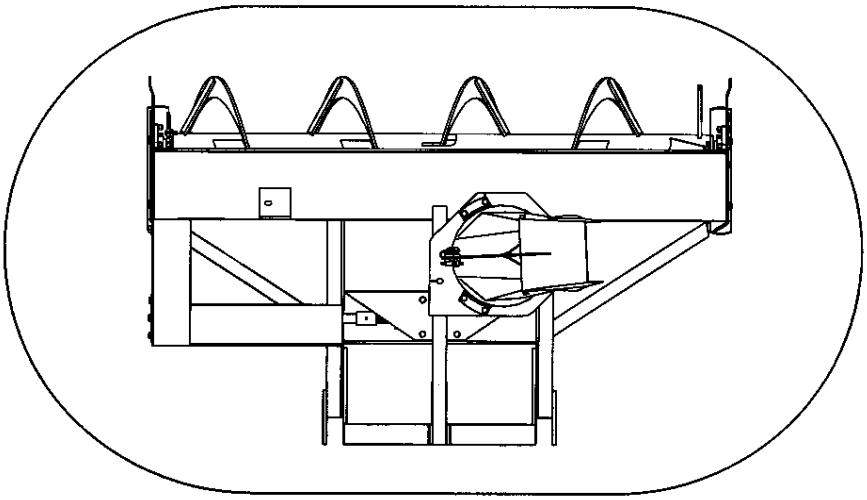

Figure A

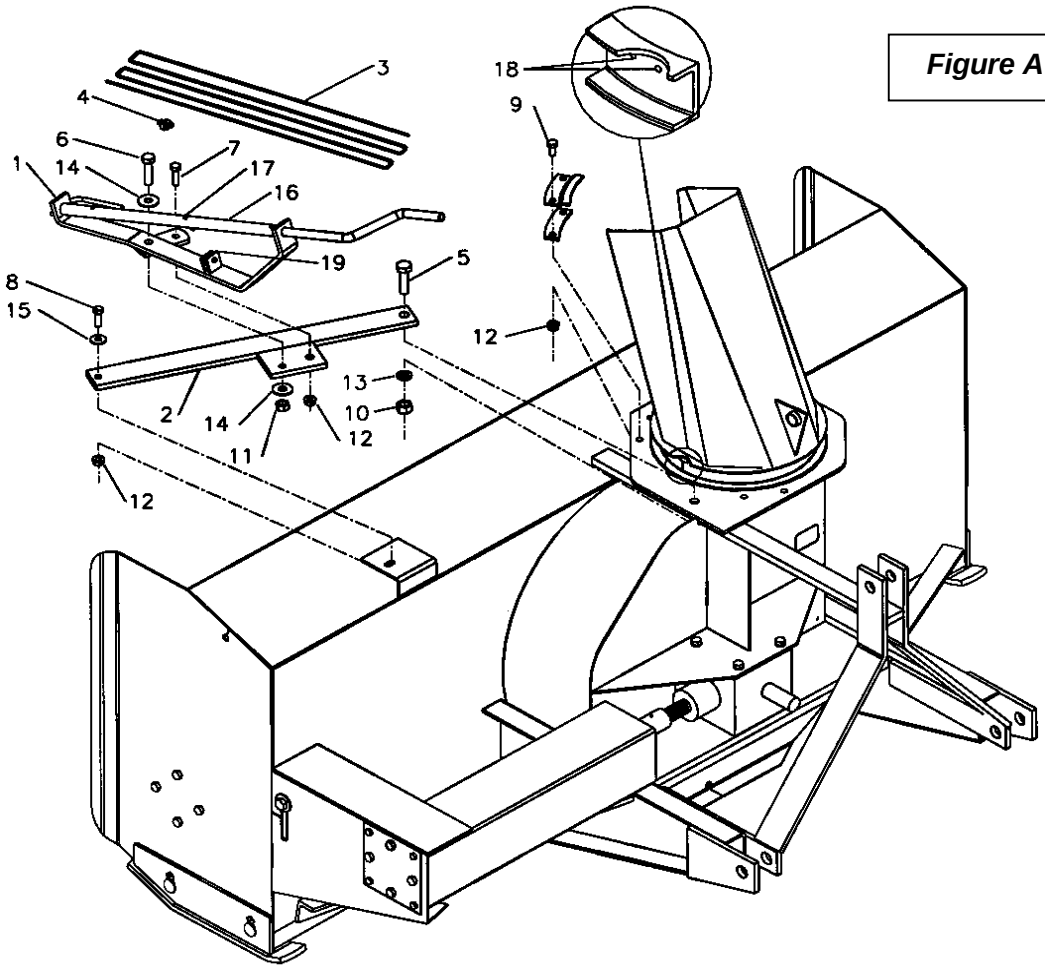

Figure B

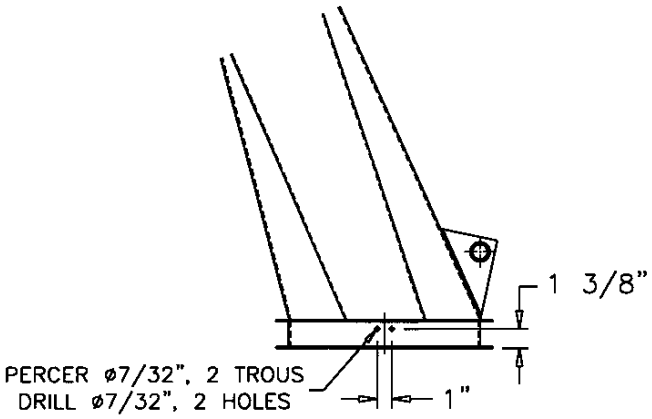

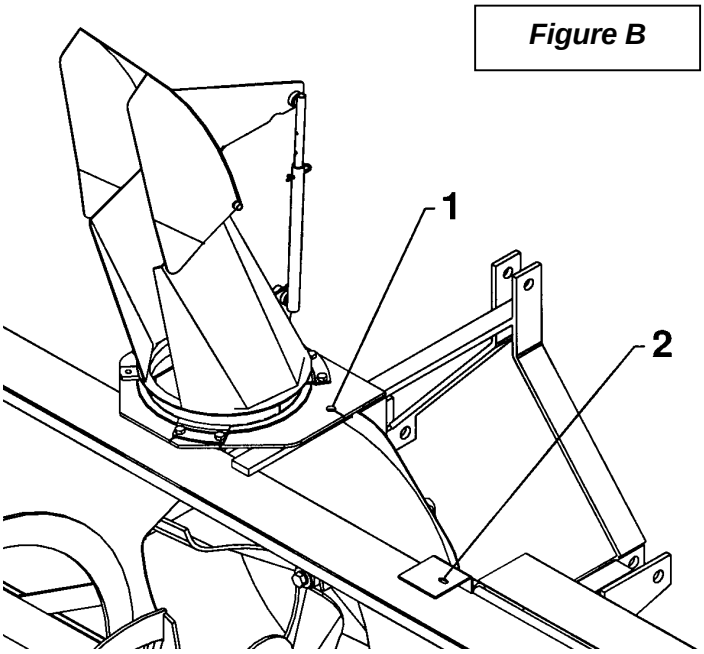

Hydraulic Rotation with Cylinder - Kit 8046 **(Figure below ⬇)**

1. Attach the chute with the retaining plates (and spacers for SA74 & SA80). Fasten with six 1/2"NC x 1 1/4" bolts (item 11) and serrated flange nuts (item 13). Do not tighten immediately. Do not install the retaining plate on the right side immediately.
2. Fasten the cylinder bracket (item 1) on the 17/32" hole in the snowblower housing with a 1/2"NC x 1 1/4" bolt (item 10), a flatwasher (item 16) and a serrated flange nut (item 13).
3. Install the spacer (item 5) on the frame. Insert the bushing (item 6) in the hole on the bell crank (item 2). Slide the bell crank between the flatbars of the cylinder bracket (item 1) opposite the 13/16" hole on the housing.
4. **For SA74 & SA80:** Insert the upper three points attaching plate in the opening located behind the frame. Secure with a 3/4" lockwasher (item 15), a 3/4"NC x 5" bolt (item 9) and a 3/4" NC nut (item 12), as shown on figure below. Tighten securely. Install the push arm (item 3) by sliding it under the flatbar welded to the chute (as shown on figure), and insert a flatwasher 9/16" (item 16) and a 1/2" x 3/4" x 3/8"NC shoulder screw (item 7) under the part, by tipping the chute over. Tighten with a 7/16" flatwasher (item 17) and a 3/8"NC stover nut (item 14) leaving some movement to the push arm.
5. **For B84 & B94:** Fasten everything with a 3/4"NC x 5" bolt (item 9) (For models prior to 2002, use a 3/4" NC x 4 1/2" bolt), lockwasher (item 15) and nut (item 12), as shown on figure below. Tighten securely. Install the push arm (item 3) by sliding it over the flatbar welded to the chute (opposite as what shown on figure), and insert a flatwasher 9/16" (item 16) and a 1/2" x 3/4" x 3/8"NC shoulder screw (item 7) under the part, by tipping the chute over. Tighten with a 7/16" flatwasher (item 17) and a 3/8"NC stover nut (item 14) leaving some movement to the push arm.
6. Slide the other push arm end over the bell crank (item 2), inserting a 9/16" flatwasher in between. Insert a 1/2" x 1" x 3/8"NC shoulder screw (item 8) under the part. Tighten with a 7/16" flatwasher (item 17) and a 3/8"NC stover nut (item 14) leaving some movement to the mechanism.
7. Install the retaining plate on the right side.

Note: Grease the base of the chute regularly to avoid premature wear.

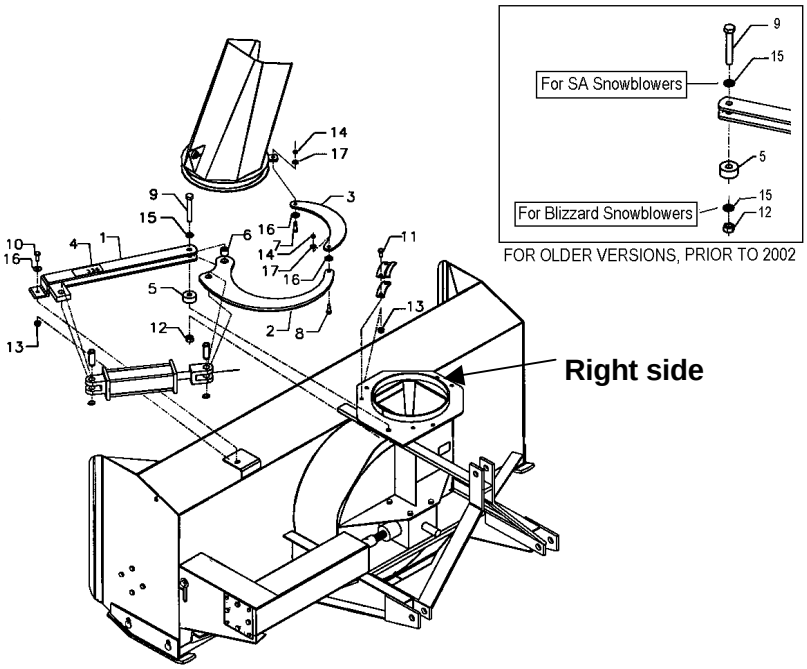

GENERAL PREPARATION

1. Read the operator's manual carefully before using the tractor and snowblower. Be thoroughly familiar with the controls and proper use of the equipment. Know how to stop the unit and disengage the controls quickly.
2. Make sure the snowblower is clear of snow before engaging the driveline.
3. Make sure the auger and fan operate freely.
4. Check the oil level in the worm gear box and if necessary, add 90 SAE gear oil.
5. Check the shear bolts, on each auger section, between the fan and on the gearbox for proper tightness.
6. If so equipped, adjust so that the snowblower skid shoes run level.
7. Wear adequate winter outer garments while operating equipment.

OPERATING CONTROLS

Work and Travel Speed

Working ground speed will depend on the depth and density of the snow to be cleared. Normally, ground speed will range from 4 to 7 MPH for light, dry snowfalls 3 to 6 inches, and 1 to 3 MPH for heavy, wet or drifted snow. To transport, disengage the driveshaft and raise the snowblower to full transport height.

Raising and Lowering the Snowblower

Move the three point lever on right hand side of seat down or forward to lower, and up or rearward to raise.

Drive Shaft Operation

The mid drive shaft is activated by pulling up the drive shaft lever on left side of seat. Push down to disengage.

Manual Rotation (if so equipped)

Turning the handle clockwise turns the chute in a clockwise direction.

WARNING: To avoid personal injury, be sure the tractor engine is off, the drive shaft disengaged, and all movement has stopped before making any adjustments.

Deflector Adjustment

Set the angle of deflection according to the distance the snow must be thrown. To set the deflector angle, loosen the hair pin and adjust the tube to the appropriate hole. Put back the hair pin in place.

Reduction Chain Tension Adjustment

The premature wear of the chain may be caused by tension being too tight. It is therefore important not to tighten chain to its maximum.

- To adjust the tension on the drive chain, loosen the bolt (see figure below, item 1), securing the idler sprocket to the snowblower housing.
- To tighten the chain, lower the bolt. Leave approximately 1/8" deflection in one span of the chain. Retighten securely the bolt holding the idler sprocket.

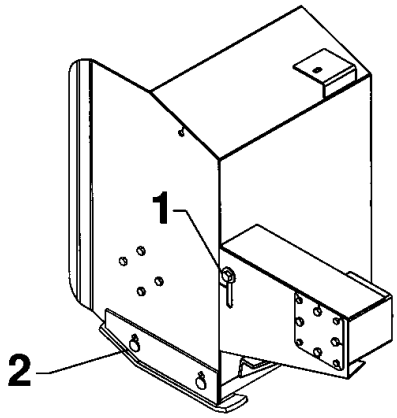

Skid Shoe Adjustment

Adjust the skid shoes so that the snowblower runs level and according to the surface conditions so that stones are not thrown with the snow.

Adjust both skid shoes to the same height to keep the cutting edge level and adjust upwards for smooth surfaces.

Loosen skid shoe bolts (item 2) and adjust according to instructions below, and securely tighten bolts:

Clearance between cutting edge and surface:

- *Level paved surface :* Adjust to 1/16" to 1/8"
- *Uneven or gravel surface:* Adjust to 1/2" to 5/8"

SNOW REMOVAL METHODS

When removing snow, do not use the snowblower as a dozer blade to push snow. Let the snowblower work its way through deep drifts. If the speed of your tractor is too fast, the snowblower may become overloaded and clog. For best results, raise the snowblower and remove a top layer of snow. A second pass with the snowblower will remove the remaining snow.

IMPORTANT : Use full RPM power when removing wet, sticky snow. Low RPM power will tend to clog the chute.

WARNING: Do not use hands or feet to unclog chute. Do not attempt to clear clogged chute of snow while tractor engine is running. If the chute clogs, disengage the drive shaft, shut off the tractor engine, remove the ignition key, wait for all movement to stop, and then clear the snow from the chute.

A definite pattern of operation is required to thoroughly clean the snow area. These patterns will avoid throwing snow in unwanted places as well as eliminating a second removal of snow

PATTERN 1

DISCHARGE SNOW BOTH SIDES

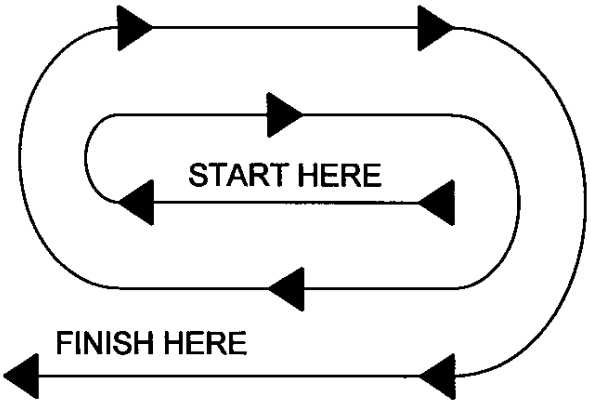

DISCHARGE SNOW BOTH SIDES

PATTERN 2

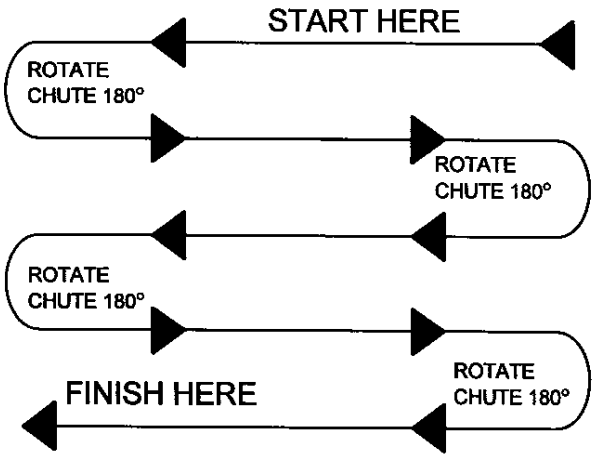

DISCHARGE SNOW THIS SIDE ONLY

Where it is possible to throw the snow to the left and right (above), as on a long driveway, it is advantageous to start in the middle. Plow from one end to the other, throwing snow to both sides without changing the direction of the discharge guide

If the snow can only be thrown to one side of the driveway or sidewalk (above), start on the opposite side. At the end of the first pass, rotate the discharge guide 180 degrees for the return pass. At the end of each succeeding pass, rotate the discharge guide 180 degrees to maintain direction of throw in the same area.

MAINTENANCE

Storage

1. Check the shear bolts at frequent intervals for proper tightness to be sure the blower is in safe working condition.

2. Never store the tractor with fuel in the fuel tank inside a building where open flame or sparks are present. Allow the engine to cool before storing in any enclosure.

3. Run the snowblower a few minutes after blowing snow to prevent freeze up of the auger and the impeller.

WARNING: Provide adequate blocking before working under the snowblower when in the raised position.

Driveline

IMPORTANT: When the snowblower is not used for more than two weeks, perform driveline maintenance and always store it in a dry place, away from bad weather conditions.

Lubrication

1. **GEAR** : Check the oil level in the worm gear drive every month. If necessary add SAE 80W90 gear oil, AGMA 5EP extreme pressure oil, or equivalent.

2. **AUGER SECTIONS** : Grease the fitting on each auger sections every 24 hours of operation or once a year.

3. **REDUCTION CHAIN** : Lubricate with chain saw lubricant every 4 hours of operation and after each use.

4. **DRIVELINE (S)** : Grease each u-joint fitting every 8 hours of operation. Slide drive shaft apart and coat sliding surfaces with grease every 8 hours of operation.

5. **ROTATION SHAFT** : Grease the shaft each 8 hours of operation.

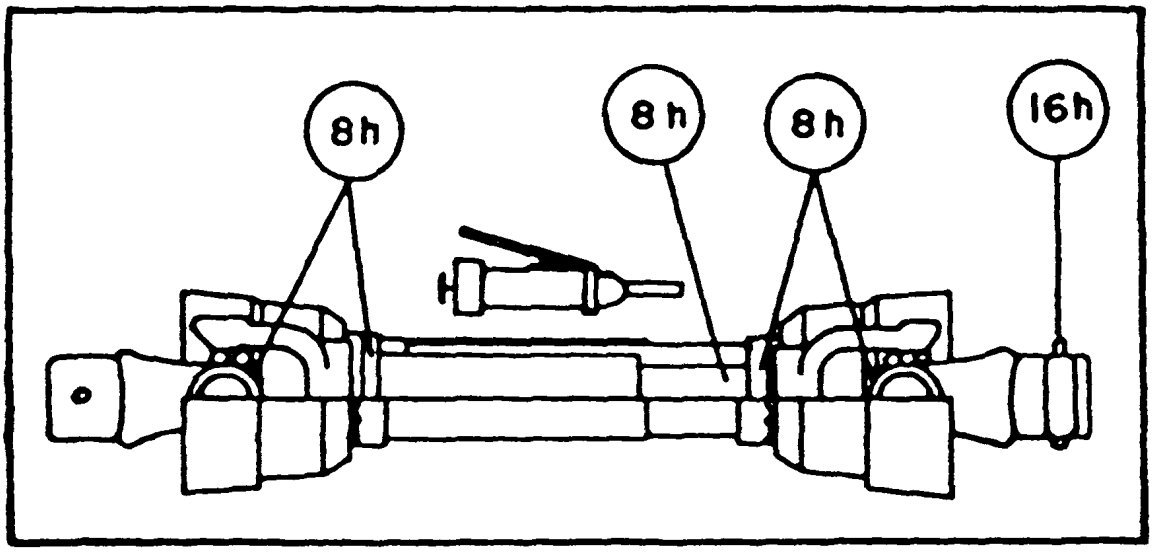

PARTS

INTRODUCTION

All parts are illustrated in "exploded views" which show the individual parts in their normal relationship to each other. Reference numbers are used in the illustrations. These numbers correspond to those in the "Reference Number" (REF) column, and are followed by the description and quantity required.

O/L - "Obtain Locally" in the part number column indicates common hardware that is available at your local hardware supply.

All reference to right and left, forward or rearward, are from the operator's seat, facing the steering wheel.

Orders must give the complete description, correct part number, the total amount required, the serial number, the method of shipment and the shipping address.

The manufacturer reserves the rights to change, modify, or eliminate from time to time, for technical or other reasons, certain or all data, specifications, or the product or products themselves, without any liability or obligation.

SNOWBLOWER – BLIZZARD B84 & B94

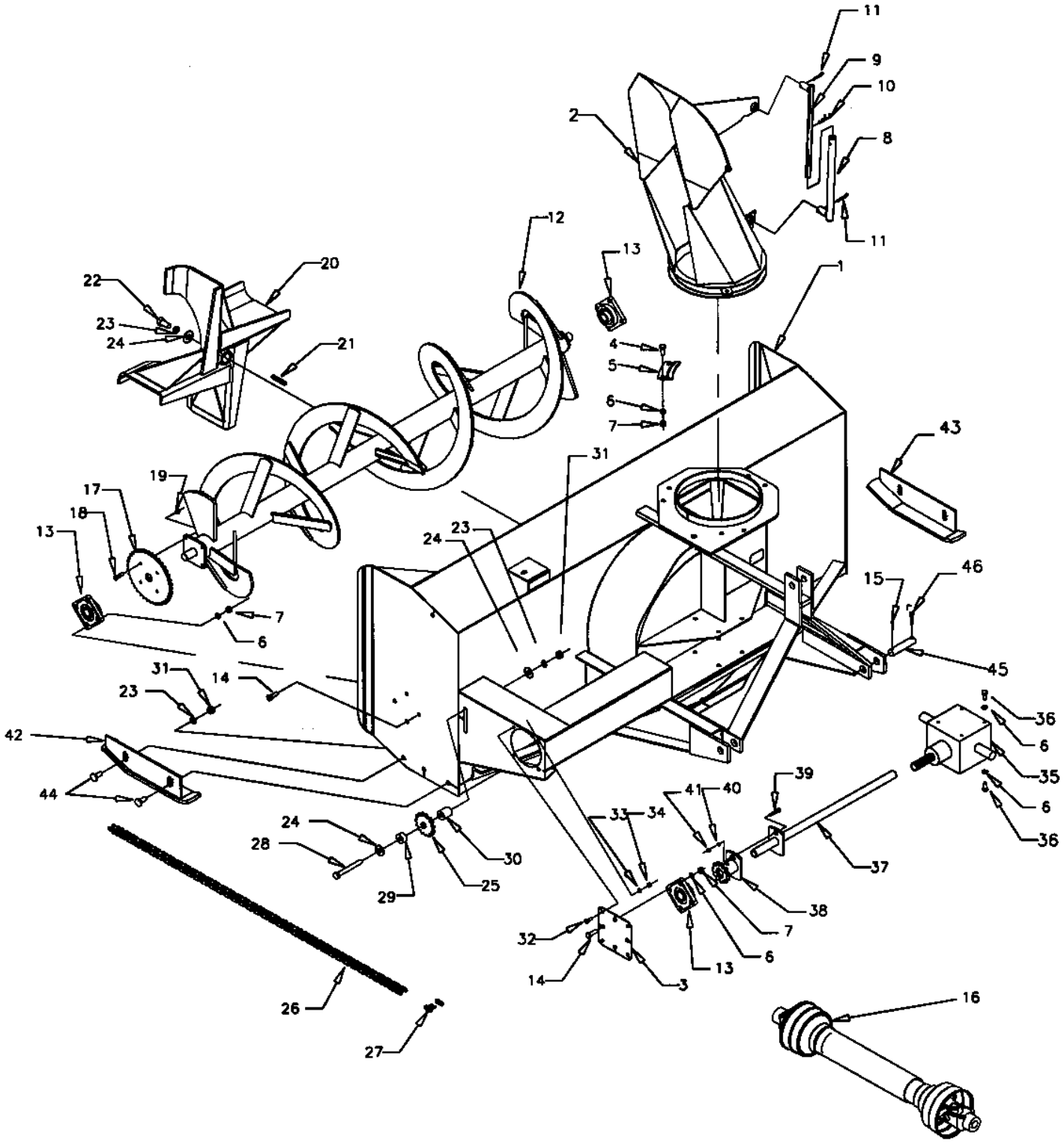

PARTS

SNOWBLOWER – BLIZZARD B84 & B94

REF.	DESCRIPTION	QTY.	PART #	
			B84	B94
1	Housing	1	---	---
2	Chute assembly	1	664482	664482
3	Drive support	1	662687	662687
4	Bolt hex. 1/2" NC x 1 1/4" gr.5	4	O/L	O/L
5	Retaining plate	3	654077	654077
6	Lockwasher 1/2"	26	O/L	O/L
7	Nut hex. 1/2" NC	18	O/L	O/L
8	Adjustment tube	1	654076	654076
9	Adjustment rod	1	654074	654074
10	Hairpin 5mm x 100mm	1	O/L	O/L
11	Cotter pin 3/32" x 1"	1	O/L	O/L
12	Auger	1	666278	666290
13	Bearing 1 1/4" hole	3	4300001	4300001
14	Bolt hex. 1/2" NC x 1 1/2" gr.5	12	O/L	O/L
15	Roll pin 1/4" x 1 3/4"	2	O/L	O/L
16	Driveline	1	662538	662538
17	Sprocket #60A38	1	654007	654007
18	Bolt hex. 3/8" NC x 1 1/2" gr.5	4	O/L	O/L
19	Nylon insert locknut 3/8" NC	4	O/L	O/L
20	Fan	1	664378	664378
21	Key 3/8" x 3/8" x 2 3/4"	1	654174	654174
22	Bolt hex. 5/8" NC x 1 1/2" gr.5	1	O/L	O/L
23	Lockwahser 5/8"	6	O/L	O/L
24	Flatwasher 11/16" dia. hole	3	O/L	O/L
25	Idler sprocket	1	654010	654010
26	Chain #60 x 94 links, incl. connecting link	1	655788	655788
27	Connecting link #60	1	654839	654839
28	Bolt hex. 5/8" NC x 5" gr.5	1	O/L	O/L
29	Idler spacer	1	656912	656912
30	Idler spacer	1	656911	656911
31	Nut hex. 5/8" NC	5	O/L	O/L
32	Bolt hex. 3/8" NC x 1" gr.5	4	O/L	O/L
33	Lockwasher 3/8"	4	O/L	O/L
34	Nut hex. 3/8" NC	4	O/L	O/L
35	Gearbox	1	662195	662195

SNOWBLOWER – BLIZZARD B84 & B94

REF.	DESCRIPTION	QTY.	PART #	
			B84	B94
36	Bolt hex. 1/2" NC x 1" gr.5	8	O/L	O/L
37	Drive shaft	1	655786	664492
38	Shear plate	1	654024	654024
39	Bolt hex. 5/16" NC x 2" gr.5	1	O/L	O/L
40	Lockwasher 5/16"	1	O/L	O/L
41	Nut hex. 5/16" NC	1	O/L	O/L
42	Left adjustable skid shoe	1	666287	666287
43	Right adjustable skid shoe	1	666288	666288
44	Carriage bolt 5/8" NC x 1 1/2" gr.5	4	O/L	O/L
45	Pin cat.2	2	655813	655813
46	Linch pin 7/16"	2	O/L	O/L

MANUAL ROTATION – KIT 8051

REF.	DESCRIPTION	QTY	PART #
1	Flat bar with attaching plate	1	664506
2	Bolt hex. 1/2" NC x 1 1/4"	3	O/L
3	Flatwasher 9/16"	1	O/L
4	Serrated flange nut 1/2" NC	4	O/L
5	Flatwasher 11/16"	2	O/L
6	Nylon insert locknut 5/8" NC	1	O/L
7	Nut hex. 3/4" NC	1	O/L
8	Lockwasher 3/4"	1	O/L
9	Bolt hex. 3/4" NC x 2 1/2"	1	O/L
10	Rotation bracket	1	664505
11	Bolt hex. 1/2" NC x 1 3/4"	1	O/L
12	Rotation tube	1	654187
13	Rotation handle	1	654185
14	Bolt hex. 1/4"NC x 1 1/2"	1	O/L
15	Cable 3/16" x 152" LG	1	654201
16	Cable clamp	1	654202
17	Bolt hex. 5/8" NC x 2 1/2"	1	O/L
18	Nylon insert locknut 1/4" NC	2	O/L
19	Pulley	1	654189
20	Bolt hex. 1/4" NC x 1 1/4"	1	O/L

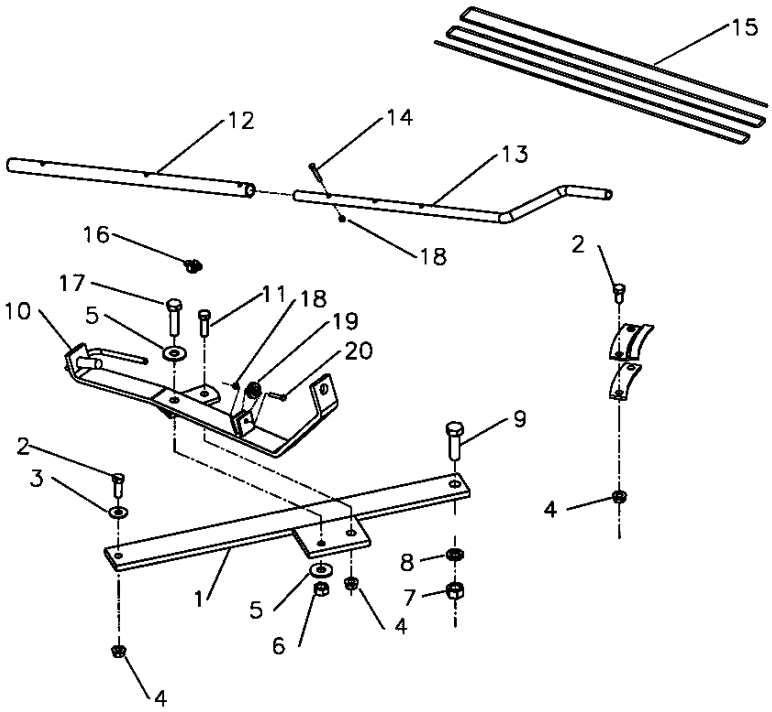

HYDRAULIC ROTATION BY CYLINDER- KIT 8046

REF.	DESCRIPTION	QTY	PART #
1	Cylinder bracket	1	664475
2	Bell crank	1	664473
3	Push arm	1	664474
4	Decal # 336	1	664548
5	Spacer	1	664477
6	Bushing	1	664476
7	Shoulder screw 1/2" dia. x 1"lg, 3/8" NC	1	664578
8	Shoulder screw 1/2" dia. x 3/4"lg, 3/8" NC	1	664577
9	Bolt hex. 3/4" NC x 5"	1	O/L
	Bolt hex. 3/4" NC x 4 1/2" (For B84 & B94 old models, prior to 2002)	1	O/L
10	Bolt hex. 1/2" NC x 1 1/4"	3	O/L
11	Flatwasher 7/16"	2	O/L
12	Nut hex. 3/4" NC	1	O/L
13	Serrated flange nut 1/2" NC	3	O/L
14	Stover Nut 3/8" NC	2	O/L
15	Lockwasher 3/4"	1	O/L
16	Flatwasher 9/16"	3	O/L

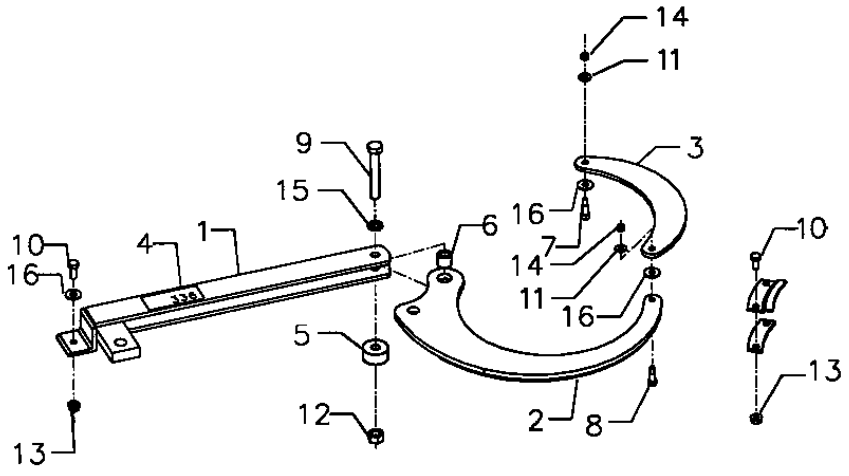

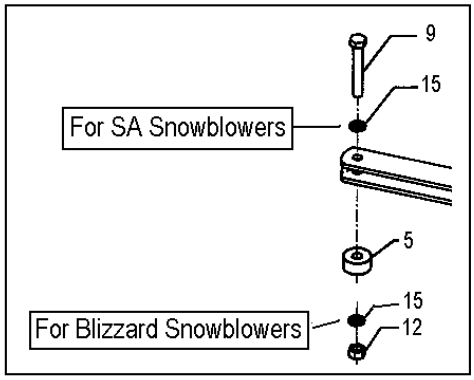

FOR OLDER VERSIONS, PRIOR TO 2002

GEARBOX (662195)

REF.	DESCRIPTION	QTY.	PART #
1	Casing	1	656640
2	Oil seal (35 x 72 x 10)	1	659845
3	Snap ring	1	656652
4	Shim	2	656649
5	Bearing	1	656653
6	Sleeve	1	656648
7	Snap ring	1	656654
8	Bearing	1	656647
9	Shaft	1	656651
10	Gear	1	656645
11	Snap ring	1	656646
12	Bearing	2	656641
13	Shim	1	656644
14	Snap ring	2	656642
15	Oil seal (40 x 80 x 12)	2	656643
16	Shaft	1	662212
17	Gear	1	656657
18	Shim	1	656655
19	Filter plug	1	656662
20	Cover	1	656660
21	Hex.bolt (M10 x 14)	4	656659
22	Plug 3/8" NPT	2	655259

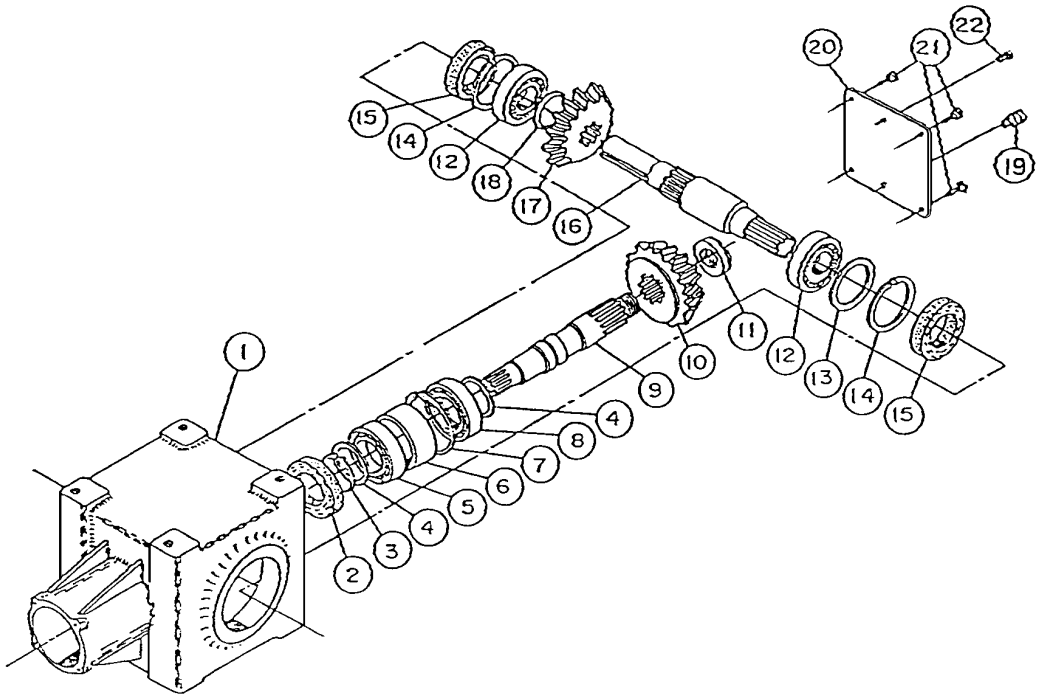

DRIVELINE (662538)

REF.	DESCRIPTION	QTY.	PART NUMBER
1	Push pin yoke assembly	1	663133
2	Universal joint kit	2	663134
3	Outer yoke	1	663136
4	Outer tube	1	663140
5	Inner tube	1	663142
6	Inner yoke	1	663144
7	Yoke and hub assembly	1	663145
8	Bolt and nut	2	662199
9	Grease fitting	1	663148
10	Ball	24	663162
11	Shear bolt and nut	1	663149
12	Shields with safety chain	1	663150
13	Safety pin	1	663151

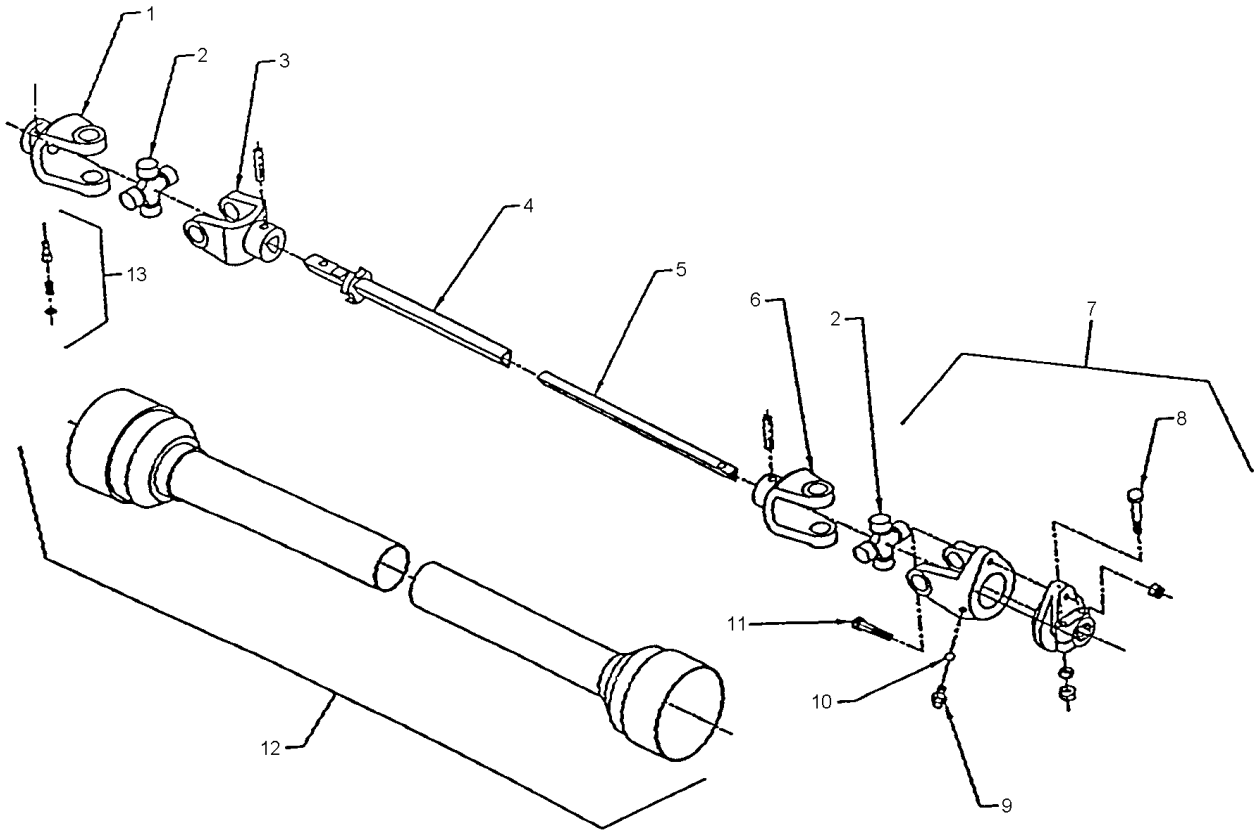

WARRANTY

RAD TECHNOLOGIES INC.

RAD TECHNOLOGIES INC. warrants to the original buyer that the equipment is free from defects in material and workmanship. RAD TECHNOLOGIES INC.'s obligation, under this warranty, will be limited to the repair or replacement of any non-wear part or component, which RAD TECHNOLOGIES INC. finds to be defective within **one year** from the date of original purchase (unless otherwise-specified). The applicable warranty period for commercial or rental use shall be ninety (90) days from the date of purchase

In no event shall RAD TECHNOLOGIES INC. be liable for consequential, special, direct or indirect damages incurred by the buyer/user.

All components not manufactured by RAD TECHNOLOGIES INC. (such as motors, actuators, hydraulic components, tires, ...etc.) are covered by the original manufacturer's warranty in conjunction with RAD TECHNOLOGIES INC.

RAD's obligation under this warranty shall be limited to repairing or replacing, free of charge to the original purchaser, any part that, in RAD's judgment, shall show evidence of such defect, provided the **distributor** returns the part prepaid within thirty (30) days from date of failure.

This warranty shall not be interpreted to render RAD TECHNOLOGIES INC. liable for injuries or damages of any kind or nature to person or property. This warranty does not extend to losses because of delays, or to any expenses or losses incurred for labor, substitute machinery, rental or for any other reason.

Except as set forth above, RAD TECHNOLOGIES INC. shall have no obligation or liability of any kind on account of any of its equipment and shall not be liable for special or consequential damages. RAD TECHNOLOGIES INC. makes no other warranty, expressed or implied, and specifically, RAD TECHNOLOGIES INC. disclaims any implied warranty or merchantability or fitness for a particular purpose**. Some states or provinces do not permit limitations or exclusions of implied warranties or incidental or consequential damages, so the limitations or exclusions in this warranty may not apply.**

This warranty is subject to any existing conditions of supply, which may directly affect our ability to obtain materials or manufacture replacement parts. RAD TECHNOLOGIES INC. reserves the right to make improvements in design or changes in specifications at any time, without incurring any obligation to owners of units previously sold.

No one is authorized to alter, modify or enlarge this warranty nor the exclusions, limitations and reservations.

2835 Chemin de l'Aéroport, Thetford Mines (Québec) G6G 5R7
Tél.: (418) 338-4499 Fax: (418) 388-6090
Internet: www.radinter.com EMAIL: radtech@radinter.com

TORQUE SPECIFICATION TABLE

GENERAL SPECIFICATION TABLE Use the following torques when special torques are not given Note: These values apply to fasteners as received from supplier, when dry. These values do not apply if lubricants are used.		
BOLT SIZES (SAE)	**TORQUE**	
INCHES	**Pounds-Foot**	**Newtons-Meter**
1/4	5	7
5/16	10	14
3/8	20	27
7/16	25	41
1/2	88	119
9/16	121	164
5/8	165	224
3/4	297	403
7/8	440	597
1	638	865
1 1/8	840	1139
1 1/4	1180	1600
1 3/8	1570	2129
1 1/2	2070	2807

BOLT SIZES (METRIC)	**TORQUE**	
MILLIMETERS	**Pounds-Foot**	**Newtons-Meter**
M6	10	13
M8	22	30
M10	40	54
M12	59	80
M14	93	126
M16	130	176
M18	168	228
M20	205	278

Manufactured by:

RAD Technologies Inc.
2835, Chemin de l'Aéroport
Thetford Mines, Québec, Canada, G6G 5R7
Tel.: (418) 338-4499 - Fax.: (418) 338-6090
E-mail : radtech@radinter.com
Internet : www.radinter.com

Printed in Canada